Hot Tub Pre-Delivery Instructions

All Swim Ltd
Link Trade Park
Penarth Road
Cardiff CF11 8TQ

T 029 20705059
F 029 20713340
E sales@allswimltd.com
W www.allswimltd.com

Please read this information carefully, the following is a guideline to assist you on how to prepare for delivery and set-up of your new hot tub, specifically your delivery access, site selection, ground preparation, electrical and water requirements.

Access Requirements

Please make sure before the date of delivery there is sufficient clearance for the hot tub and its trolley or sled as the hot tub is normally wheeled or pulled/pushed to its final destination.

You must have a minimum width of 1m and a minimum height of 2.4m.

Our hot tub dolly enables us to simply roll a hot tub into place. Please note: the turning circle of the hot tub dolly will need to be accounted for when navigating around bends or corners.

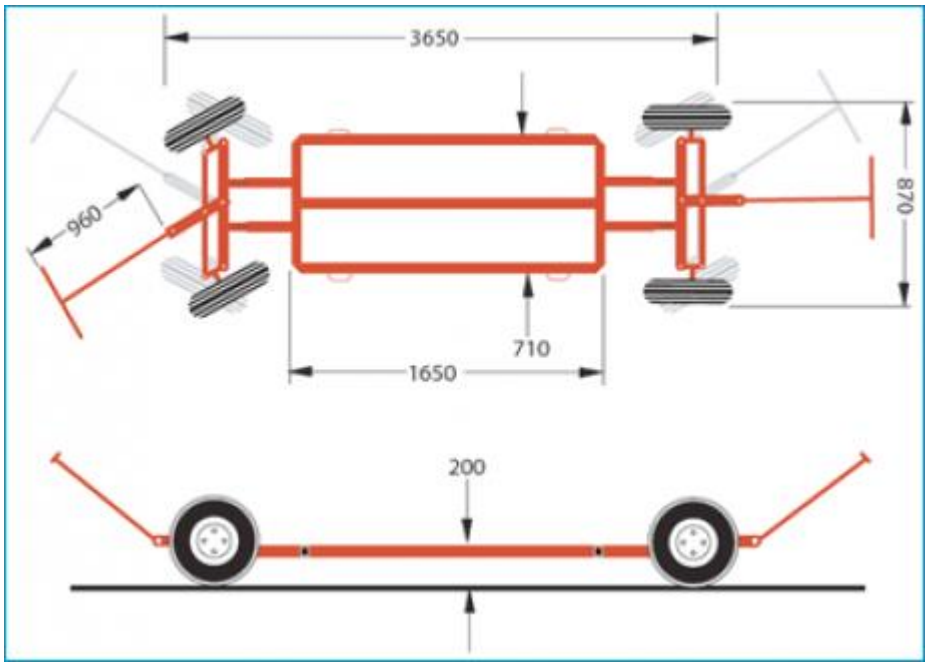

Use the height of the Spa Dolly plus the height of your chosen hot tub when laid on its side to determine the vertical clearance required. Use the height of the tub which will become the width to determine the maximum width of clearance necessary. If the Spa Dolly width is greater this will be the measurement you will use.

NOTE: It may be necessary to allow for additional overhead clearance if the hot tub will be rolled up or down an incline or moved up or down a short flight of stairs.
It also may be necessary to remove a gate, part of a fence, or other movable obstructions in order to move the tub to its installation site.

Small obstructions can sometimes be overcome by having extra people (preferably at least two) on site to help. This is the customer's responsibility to arrange.
Sometimes, a hi-ab or crane is the only way to install the hot tub by lifting it to its final destination and if this is required All Swim can recommend local lifting companies and can arrange for you – this additional cost will be quoted prior to order and will then be paid directly to the lifting company.

Please note that we recommend you plan a delivery route so there will not be any unexpected problems on the day of installation. If a route is not planned and we are unable to make the delivery, the cost of a second visit will be charged to you.
Please allow 10 per cent extra for packaging when checking access

If you are unsure about your access, All Swim offer a FREE no obligation site visit and we will check your access for you to give you peace of mind.

Please note access videos and photos are required prior to booking a hot tub delivery.

Site Selection and Preparation

IMPORTANT: Site selection and preparation are the responsibility of the customer. Please carefully read these instructions and consult us if you have any questions.

You probably have a spot picked out for your new hot tub, whether it's indoors or outdoors, on a patio or on a deck. Please be sure to check the following:

- ✓ Your hot tub must be placed on a structurally sound, level surface. A filled tub can weigh a great deal. Make certain that the location you choose can support the weight of your filled hot tub. **(Please refer to our hot tub dimensions and weights later in this guide).**
- ✓ All newly constructed bases must be prepared in plenty of time prior to delivery to allow time for the concrete to fully set.
- ✓ It is the responsibility of the customer to provide a suitable base that is **flat, level and solid** to prevent distortion from occurring. Any structural damage caused by an improper base or base failure may invalidate the manufacturer's warranty. We advise all customers take into consideration a weight of at least 2,000kg.
- ✓ Locate your equipment compartment, which houses all of the electrical components, in a place where water will drain away from it. Allowing water into the equipment compartment can damage the electronics or may result in tripping your house's circuit breaker or RCD.
- ✓ Leave yourself easy access to all circuit breakers and RCD's.
- ✓ Leave access to at least the entire front of the tub (the removable panels provide access to the spa's equipment) for periodic spa care and maintenance.
- ✓ For safety you should never position your hot tub near overhead cables or powerlines

Check your Clearance

Check the width of doorways, passages and gates to make sure the hot tub can pass. Gates, fences and doors may need to be moved. Ensure that there is nothing protruding such as drainage pipes or sills that could obstruct the access.
Check to see if there are any low rooves or branches that could hinder the vertical clearance.
If there are any corners on the path to your designated installation site, check to see that the hot tub will pass. Please allow enough distance around corners to move the hot tub.
Check that there are no steep slopes, retaining walls or large amount of stairs that could cause problems. (In some cases, extra manpower will need to be provided).
Under special circumstances, where there is no clear and easy route, a crane can be used to deliver your new hot tub, if this is the case please do not hesitate to contact us so we can help you arrange this service. Please note that the cost of a crane is not included in the cost of delivery.

Please take into consideration these following points for access.

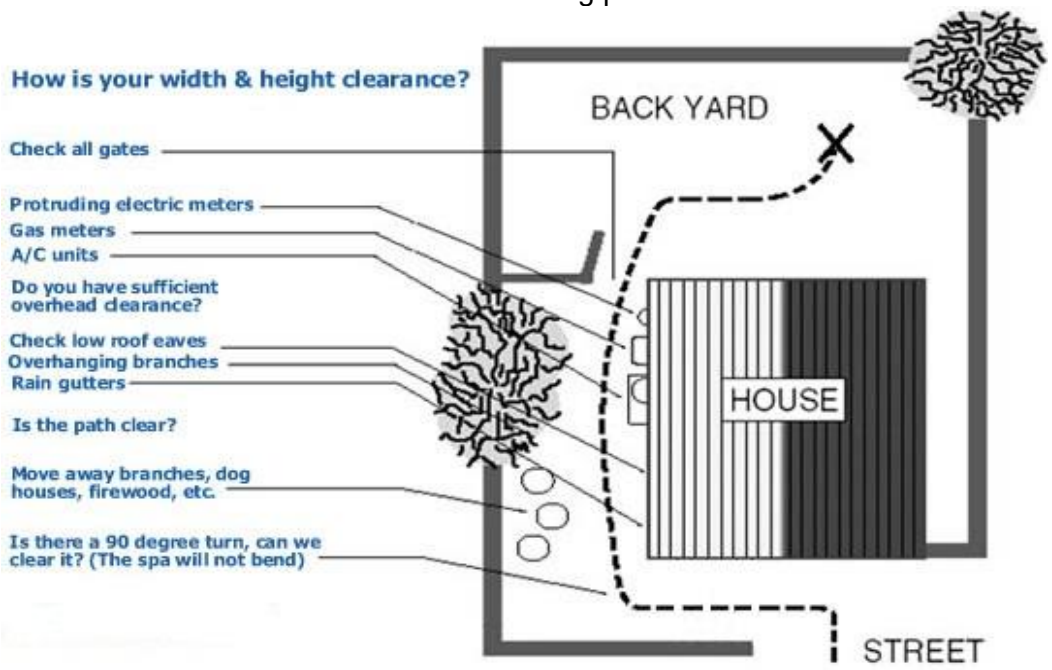

Hot Tub Location Planning

Outdoors

No matter where you install your new hot tub, it's important that you have a structurally sound, level and solid foundation to support it (grass is unsuitable). Structural damage to the tub resulting from incorrect installation or placement on an inadequate foundation is not covered under the hot tub's limited warranty.

If you install the tub outdoors, a reinforced concrete pad at least four inches/10cm thick is recommended for your Hot Tub.

In selecting the ideal location for your hot tub, we suggest that you take into consideration:

- ✓ The proximity to changing area and shelter (especially in colder weather conditions).
- ✓ The pathway to and from the hot tub (free of debris, dirt and leaves so as not to be tracked into the hot tub).
- ✓ The closeness to trees and shrubbery (leaves and birds could create extra work).
- ✓ A sheltered environment (less wind and weather exposure can result in lowered operating and maintenance costs).
- ✓ The overall enhancement of your environment. It is preferable not to place the hot tub under an un-guttered roof overhang since run off water can shorten the life expectancy of the hot tub.

Deck

To be certain your deck can support your hot tub, you must know the deck's maximum load capacity. **Consult a qualified building contractor or structural engineer before you place the tub on an elevated deck or indoors.** The weight per square foot must not exceed the structure's rated capacity, or serious structural damage could result. Please remember if you sink the hot tub in decking this will restrict both the cabinet access and also access to the drainage point.

We do not advise you to position the hot tub with decking built around it or underground as it can significantly impact future maintenance requirements.

Indoors

Be aware of some special requirements if you place your hot tub indoors. Water will accumulate around the tub, so flooring materials must provide a good grip when wet.

Remember also that hot tubs need to be drained approximately every 10 to 12 weeks dependant on bather loads, so ease of drainage will need to be considered. If building a room for the hot tub, it is recommended that a floor drain be installed. The humidity will naturally increase with the tub installed. Water may get into woodwork and produce dry-rot, mildew or other problems. Check for airborne moisture's effects on exposed wood, paper, etc. in the room. To minimise these effects, it is best to provide plenty of ventilation to the spa area. Installation of a dehumidifier may be required. Please contact All Swim for further advice and help with this.

If you decide to have your hot tub indoors, please make sure that you have also allowed sufficient ceiling height to allow clearance in your room for removal of your hot tub cover and for your own height for climbing in and out of your hot tub. Please also ensure a suitable allowance has been made for gaining access to the room for installing the hot tub and that your chosen model will fit into the space – please see access requirements for further information.

Additional Access Requirements

Service Compartment

Our service engineers will need to have access to the equipment inside your hot tub, therefore you need to plan the position of the hot tub to allow easy access (we recommend leaving a minimum space of 24 inches or 60cm around all sides). If this is not possible then it should be in a place where it can be easily moved when drained.

Cover

If you are sinking the hot tub, it should be 200mm proud of the top of the decking to allow for the cover to clip onto the side.

Cover Lifter

To make it easier to access your hot tub a cover lifter is highly recommended which would enable a single person to uncover the hot tub. If you decide to invest in a cover lifter it is recommended to leave an additional 400mm on each side of your hot tub to be able to walk down the side and operate the cover lifter and then 600mm at the rear of your hot tub for the storage area of the cover and cover lifter.

Steps

If you have decided to have hot tub steps, you will need to take into account how much extra clearance you will need at the front of the hot tub. Please note: hot tub steps come in a range of shapes and sizes and some even have added drawers - this will all need to be accounted for when positioning your hot tub.

AquaSolus Step Dimensions

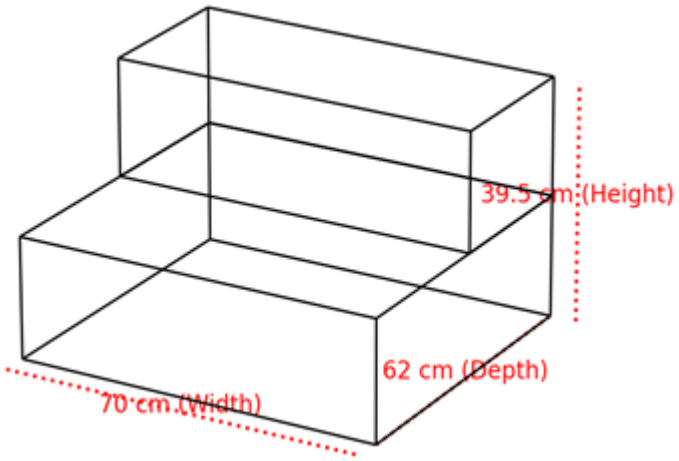

Electrical Requirements

Any electrical point supplied for a hot tub indoors or outdoors should be installed by a competent, certified electrician. All works must be certificated conforming to part P of the building Regulations. Electrical installation work should always conform to BS: 7671 18th Edition of the wiring Regulations.

It is paramount that we see all certificates relating to the electrics that have been installed by a certified electrician, if on the day we are unable to view the certificate; we will only be able to complete a delivery and position and would charge for the second visit to complete the install.

Most, if not all domestic hot tubs are designed for single phase 230vac operation. Your certified electrician will then be able to work out what size of cabling is required. Even the smallest tub would usually require at least a 13 or 16 amp supply. Bigger tubs with 3 pumps or more generally require a 32 or 40 amp supply but this is a guide only.

Please refer to the supply required for each of our hot tubs later in this guide.

ALL outside electrical supplies must have mechanical protection; this is either in the form of steel wire armoured cable (SWA) or suitable conduit.

The hot tub MUST have its own dedicated circuit with correct size fuse breaker and RCD protection. The RCD must be 30mA.

A rotary isolator switch not closer to the Hot Tub than 2 metres is required so that the Hot Tub can be disconnected from the main supply quickly and efficiently.

We generally ask for a coil of 4 metres of cable to be left immediately next to the hot tub base so that we have enough to wire it in whichever final position you have chosen.

Neutral must be colour coded Blue and Earth must be colour coded Green/Yellow. A suitable gland to finish the SWA is required. Most hot tubs have a cable entry hole of 32mm so in some cases a 32mm – 20mm reducer is required.

Electrical Wiring Diagram

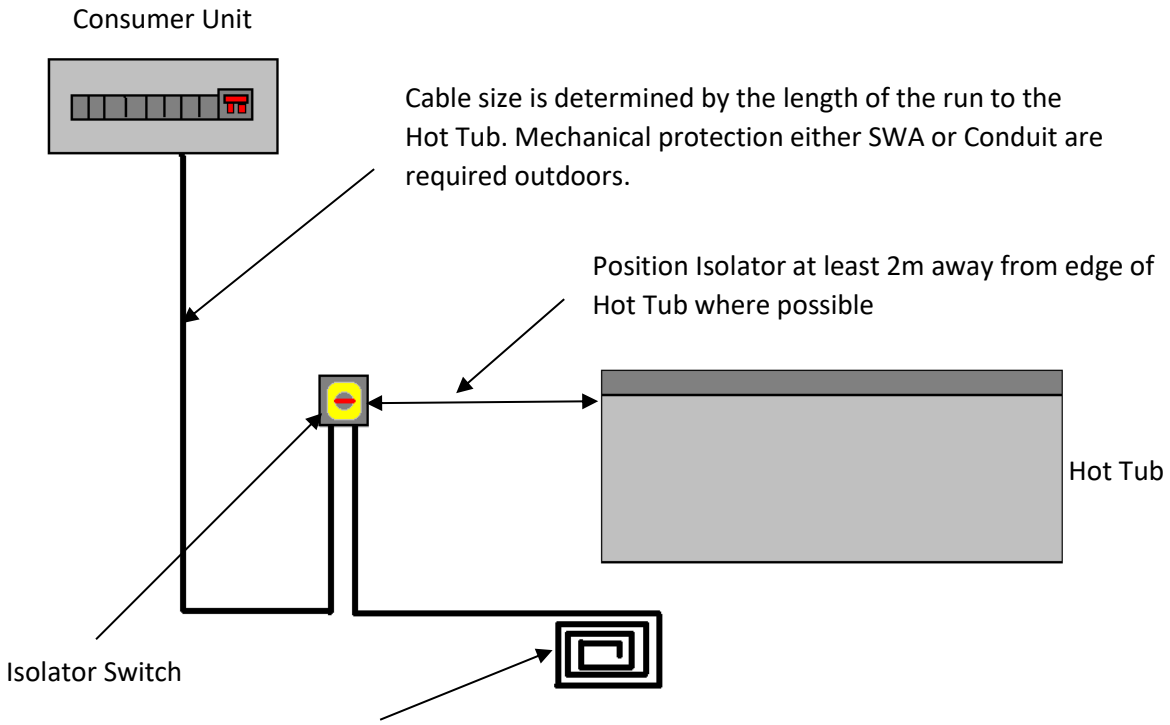

Please leave 4m of coiled wire by the side (nearest to the Isolator) of where the spa will be positioned. This will allow you to choose the final position of the spa on the day and not be restricted by the length of cable. Please also identify Live, Neutral and Earth on harmonised colours. Please also leave a suitable gland kit with cable.

Electrical Safety Zones Around a Hot Tub (Above-Ground Installation)

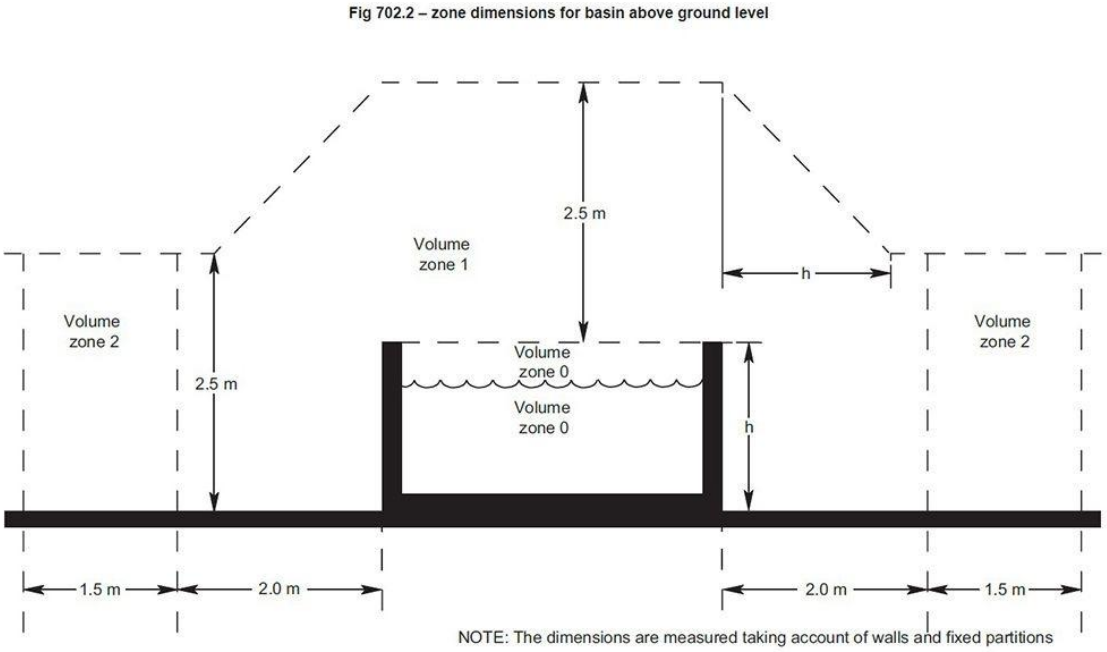

The diagram above shows the safety zones that must be followed when installing a hot tub, based on BS 7671 (IET Wiring Regulations). These zones help ensure that all electrical equipment, sockets, and switches are positioned safely around the spa.

Zone 0
This is the interior of the hot tub - the area in direct contact with water.

- Only low-voltage equipment specifically designed for use in water is permitted in this area.

Zone 1
This zone covers the area directly above the hot tub, up to 2.5 metres from the water surface.

- No standard electrical equipment is allowed in Zone 1.
- Only equipment with the correct IP rating that is designed for use near water may be installed.

Zone 2
Zone 2 extends 2.0 metres horizontally from the outer edge of the hot tub and up to 2.5 metres high.

- Electrical items within this zone must meet appropriate safety and IP requirements.
- Outdoor sockets, switches, and other electrical fittings must not be installed inside Zone 2 unless they comply with the relevant regulations.

Beyond Zone 2
Any electrical outlets, isolators, or additional equipment must be placed outside these zones, typically at least 3.5 metres horizontally from the water's edge in total (1.5m + 2m clearance shown in the diagram).

What This Means for Your Hot Tub Installation

- Your hot tub must be supplied by a dedicated electrical circuit installed by a qualified electrician.
- The isolation switch must be positioned at least 2 metres away from the hot tub, but still within clear line of sight.
- No plug sockets or electrical appliances should be placed within the shaded zone areas shown in the diagram.
- All wiring must be protected, appropriately rated, and installed in accordance with Part P and BS 7671 requirements.

Electrical Requirements – Aquasolus Hot Tubs

Aquasolus hot tubs are permanently connected to a designated electric supply (hard wired) to the power source using a single phase 230 volt power supply fitted with the correct sized cable for the current length of run to the hot tub.

The correct rated circuit breaker and a RCD (ELCB) or (RCBO).

All installations or installation inspections are to be carried out by a competent National Inspection Council for Electrical Installation Contracting (NICEIC) or Electrical Contractors Asscciation (ECA) registered electrical contractor who will issue an installation or minor works certificate (P Certificate) to the safe installation and fitting of the correctly rated RCD to BS7671. The Registration Number on this certificate MUST be given to the installers of your hot tub.

There will need to be a lockable isolator (minimum 2 metres from the water) suitable for the environment that it is used in and cable run back to the hot tub with a suitable length tail. It is recommended this tail be armoured cable which your electrical installer supplies.

NOTE: Your electrician does not then need to be on site the same time we arrive to deliver and commission your hot tub, as the Delivery Engineers are qualified to make the final connections from the tail to the hot tub control panel (located behind the front access panel).

AquaPure Series 1	Dimensions L x W x D	Empty Weight in kg	Filled Weight in kg**	Capacity in Litres	Amps Required
Brook	2130 x 1800 x 800 mm	262	1,262	1,000	13 or 20
Cove	2130 x 2130 x 900 mm	299	1,499	1,200	13 or 20
Cypress	2130 x 2130 x 900 mm	290	1,490	1,200	13 or 20
Zephyr	2130 x 2130 x 900 mm	288	1,588	1,300	13 or 20

NaturaBalance Series 2	Dimensions L x W x D	Empty Weight in kg	Filled Weight in kg*	Capacity in Litres	Amps Required
Aspen	2320 x 2000 x 940 mm	333	1,633	1,300	32
Calma	2130 x 2130 x 940 mm	351	1,551	1,200	32
Eden	2130 x 2130 x 940 mm	342	1,542	1,200	32
Harmony	2130 x 2130 x 940 mm	336	1,636	1,300	32
Sierra	2250 x 1800 x 800mm	300	1,600	1,300	32

AquaLux Series 3	Dimensions L x W x D	Empty Weight in kg	Filled Weight in kg*	Capacity in Litres	Amps Required
Cascade	2300 x 2300 x 940 mm	424	1,924	1,500	32 or 40
Serenity	2300 x 2300 x 940 mm	369	1,869	1,500	32 or 40
Solstice	2300 x 2300 x 940 mm	424	1,924	1,500	32 or 40
Zenith	2800 x 2300 x 940 mm	508	2,408	1,900	40

Vacation Series	Dimensions L x W x D	Empty Weight in kg	Filled Weight in kg*	Capacity in Litres	Amps Required
Vacation Brook	2130 x 1800 x 800 mm	262	1,262	1,000	13 or 32
Vacation Cove	2130 x 2130 x 900 mm	289.5	1,489.5	1,200	13 or 32
Vacation Cypress	2130 x 2130 x 900 mm	290	1,490	1,200	13 or 32

If you would like All Swim to recommend an electrician, please contact us for further information.

Water Requirements

The easiest and most efficient way of filling your hot tub is with a standard garden hose pipe, please have one available on the day of delivery; when it comes time to empty the hot tub water this garden hose pipe will also connect to the drainage valve inside the service compartment and will then drain away. Ideally you should empty the water into a nearby drain or soak away. Alternatively, you may wish to purchase a submersible pump to speed up the emptying process.

Hot Tub Pre Delivery Confirmation

When purchasing a hot tub please complete the following form before delivery:

I can confirm that I have understood and complied with All Swim's hot tub pre-delivery instructions.

Please Note: Any cancellations should be made a minimum of 72 hours before delivery due date, failure to provide adequate cancellation time will result in you being charged for your original delivery slot plus your rescheduled delivery date, approximate cost £600 (dependent on postcode).

Name: _____

Address: _____

_____

_____

Date: _____

Signature: _____

Note: **All Swim will not deliver or commission any hot tub until receipt of this signed declaration.**